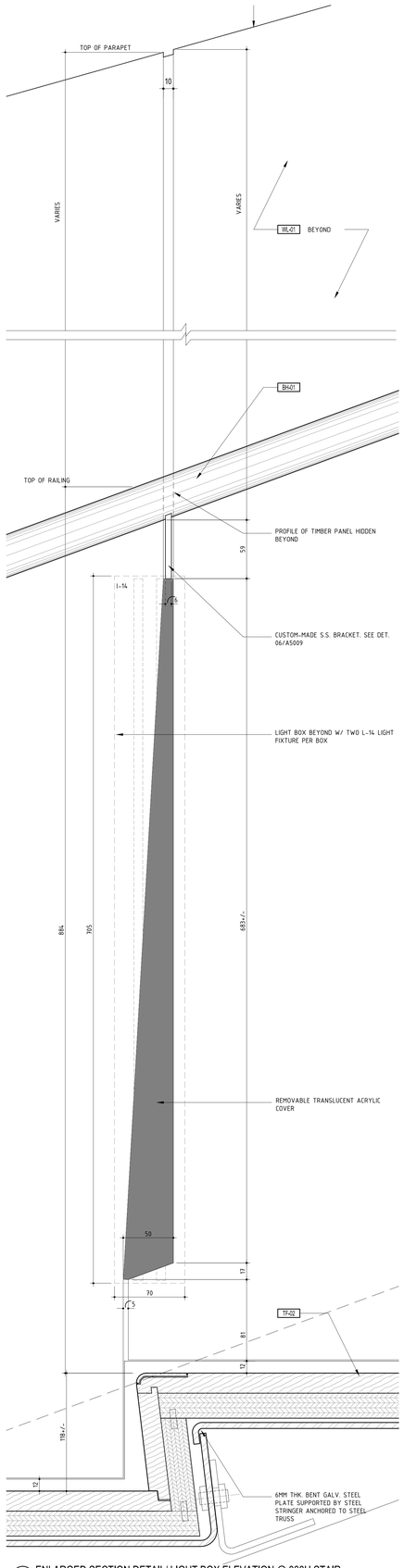

17 ENLARGED SECTION DETAIL/ LIGHT BOX ELEVATION @ 000H STAIR
SCALE:1:2

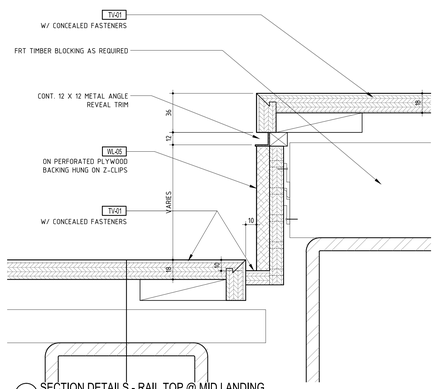

16 SECTION DETAILS - RAIL TOP @ MID LANDING
SCALE:1:2

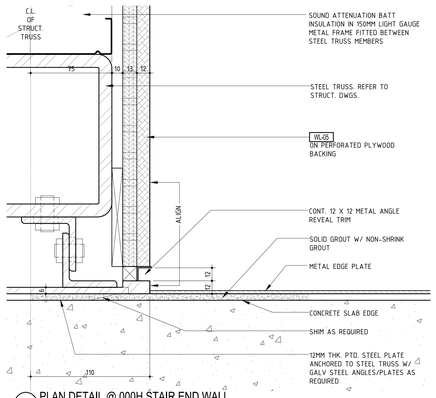

12 PLAN DETAIL @ 000H STAIR END WALL
SCALE:1:2

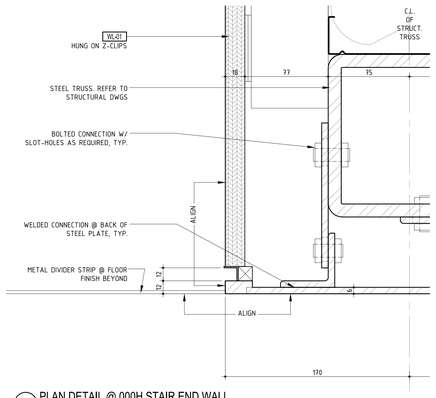

08 PLAN DETAIL @ 000H STAIR END WALL
SCALE:1:2

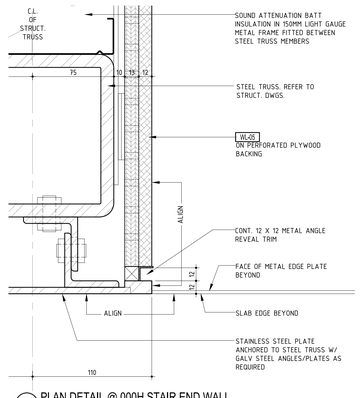

04 PLAN DETAIL @ 000H STAIR END WALL
SCALE:1:2

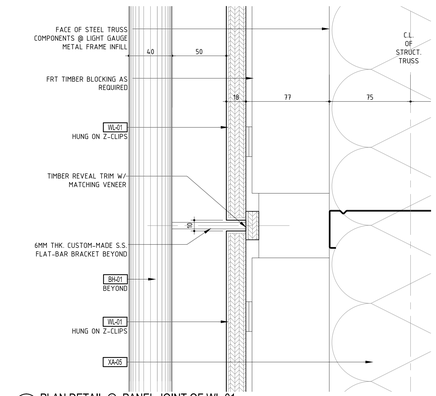

15 PLAN DETAIL @ PANEL JOINT OF WL-01
SCALE:1:2

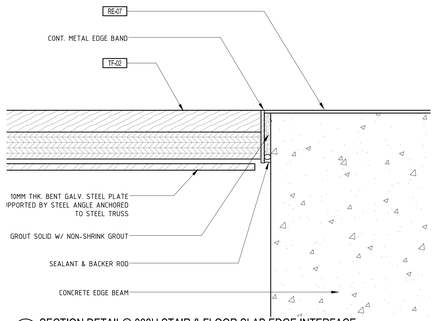

11 SECTION DETAIL@ 000H STAIR & FLOOR SLAB EDGE INTERFACE
SCALE:1:2

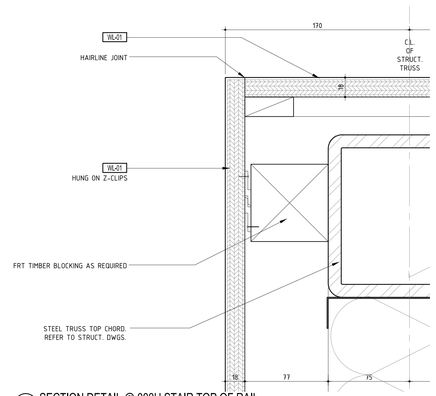

07 SECTION DETAIL @ 000H STAIR TOP OF RAIL
SCALE:1:2

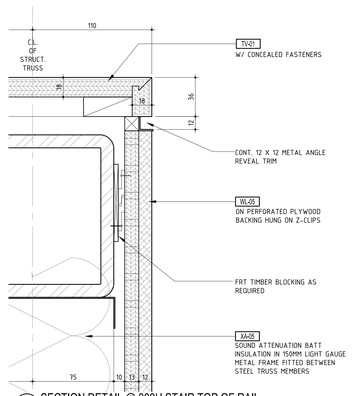

03 SECTION DETAIL @ 000H STAIR TOP OF RAIL
SCALE:1:2

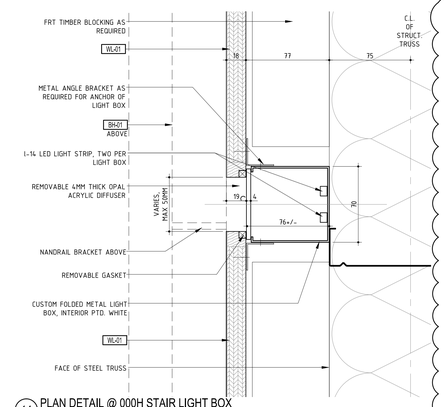

14 PLAN DETAIL @ 000H STAIR LIGHT BOX
SCALE:1:2

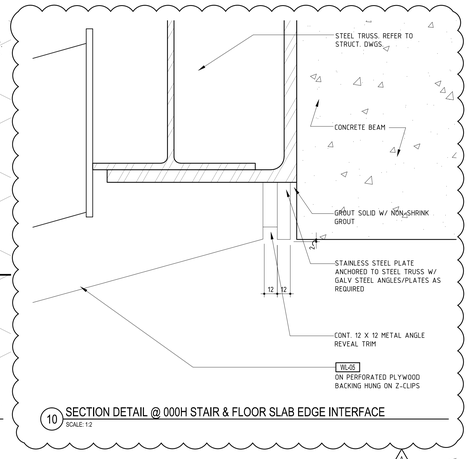

10 SECTION DETAIL @ 000H STAIR & FLOOR SLAB EDGE INTERFACE
SCALE:1:2

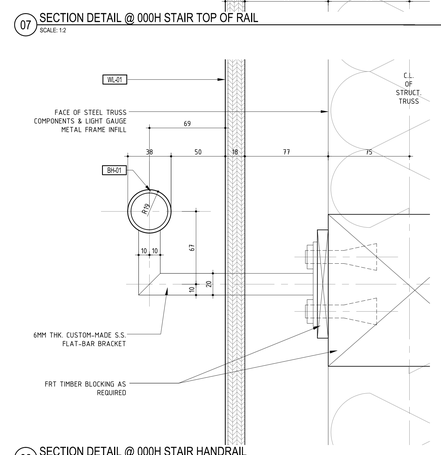

06 SECTION DETAIL @ 000H STAIR HANDRAIL
SCALE:1:2

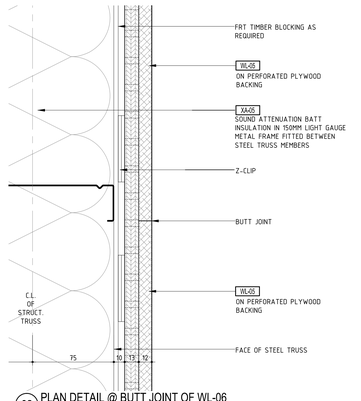

02 PLAN DETAIL @ BUTT JOINT OF WL-06
SCALE:1:2

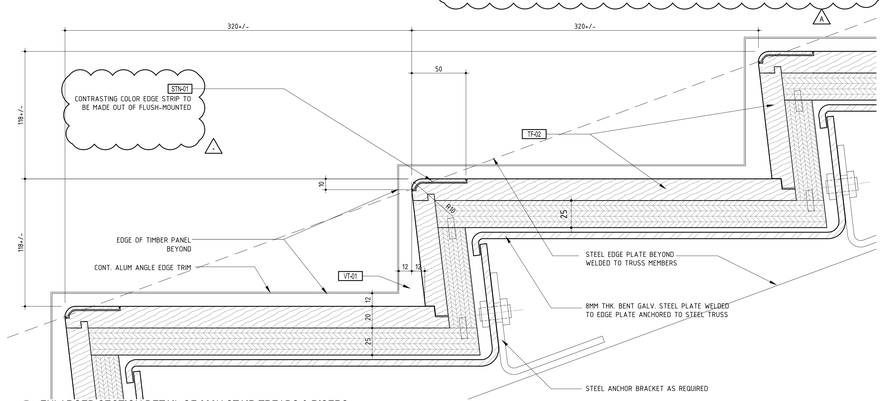

13 ENLARGED SECTION DETAIL OF 000H STAIR TREADS & RISERS
SCALE:1:2

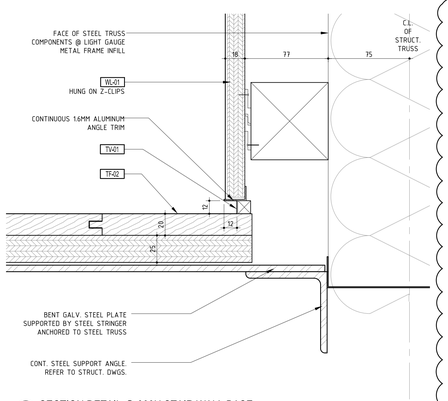

05 SECTION DETAIL @ 000H STAIR WALL BASE
SCALE:1:2

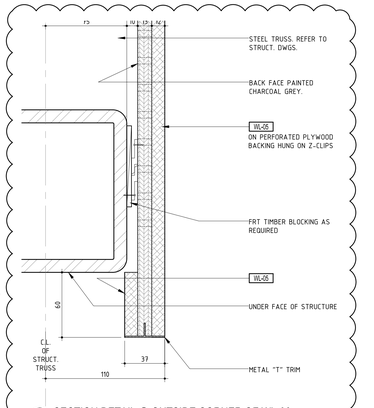

01 SECTION DETAIL @ OUTSIDE CORNER OF WL-06
SCALE:1:2

A

THIS DRAWING IS AN UNCONTROLLED COPY UNLESS STAMPED OTHERWISE

CONTRACTORS SHALL VERIFY JOB DIMENSIONS BEFORE ANY JOB COMMENCES.
ALL SHOP DRAWINGS SHALL BE SUBMITTED TO THE SUPERINTENDENT AND MANUFACTURE SHALL NOT COMMENCE PRIOR TO THE RETURN OF UNANNOTATED SHOP DRAWINGS SIGNED BY THE CONSULTANT. FIGURED DIMENSIONS SHALL TAKE PRECEDENCE OVER SCALED. THIS DRAWING SHOULD BE READ IN CONJUNCTION WITH ALL RELEVANT CONTRACT SPECIFICATIONS AND DRAWINGS COPYRIGHT OF THIS DRAWING IS VESTED IN WARDLE

General Notes

Rev	Issue	Revision Description	Amd	Date
A	SG	CONSTRUCTION ISSUE	-	12.24.13
04	JC	100% CD – TENDER ISSUE	-	07.09.12
03	JC	90% CD ISSUE	-	10.08.12
02	JC	75% CD ISSUE	-	13.07.12
01	JC	50% CD ISSUE	-	01.06.12

NADAAA

NADAAA
1920 Washington Street No.2
Boston
Massachusetts
02118 USA

Telephone
+1 617 442 6232
Facsimile
+1 888 442 1417
Email
nada@nadaaa.com

John Wardle Architects

© 2011 John Wardle Architects

Level 10, 180 Russell Street, Melbourne Victoria 3000 Australia
Tel : +613 9654 8700 www.johnwardlearchitects.com

Client: University of Melbourne Parkville Campus

Project: Faculty of Architecture Building and Planning

Title: 000H STAIR DETAILS

Project No. 0913		Scale 1:2
Drawing No. AR5009		Revision A
Date DEC 2013	Drwn -	Co-Ord -	Chck -

FILENAME - ####

FOR CONSTRUCTION